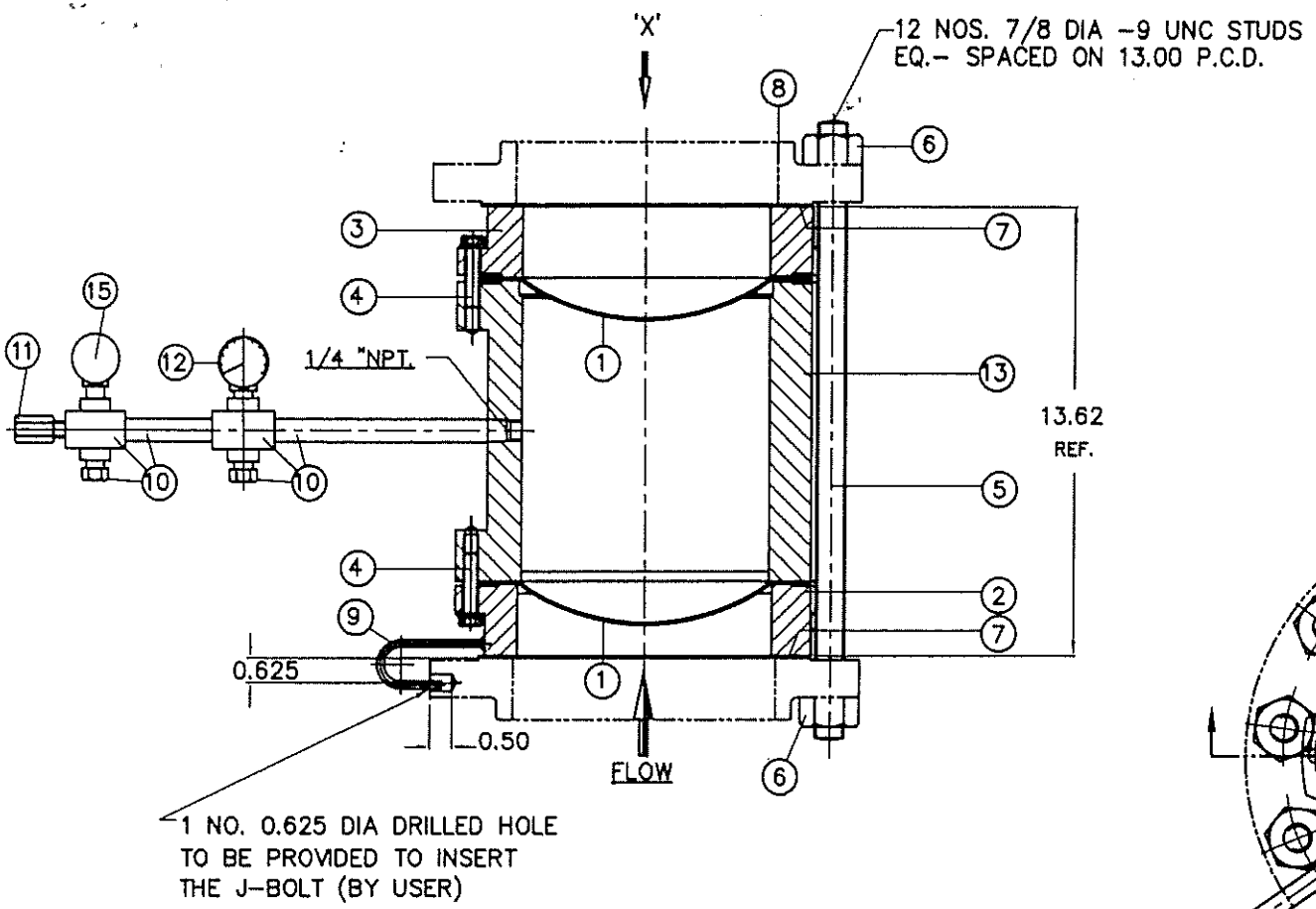

PART NO.	PART NAME	MATL.	QTY./ ASSY.
1	RUPTURE DISK	SS316L	2
2	INLET	SS316L	1
3	OUTLET	SS316L	1
4	CAP SCREW	AISI8640H	16
5	STUD	BY CUSTOMER	
6	NUT	BY CUSTOMER	
7	GASKET	BY CUSTOMER	
8	COMPANION FLANGE	BY CUSTOMER	
9	J-BOLT	ST.STEEL	1
10	PIPE NIPPLE,CROSS,PLUG	316L	2
11	EXCESS FLOW VALVE	316L	1
12	PRESSURE GAUGE-4"DIAL	SS BOU.TUBE	1
13	MID. FLANGE	SS316L	1
14	EYE BOLT(NOT SHOWN)	C.S.	2
15	PRESSURE TRANSMITTER	BY CUSTOMER	

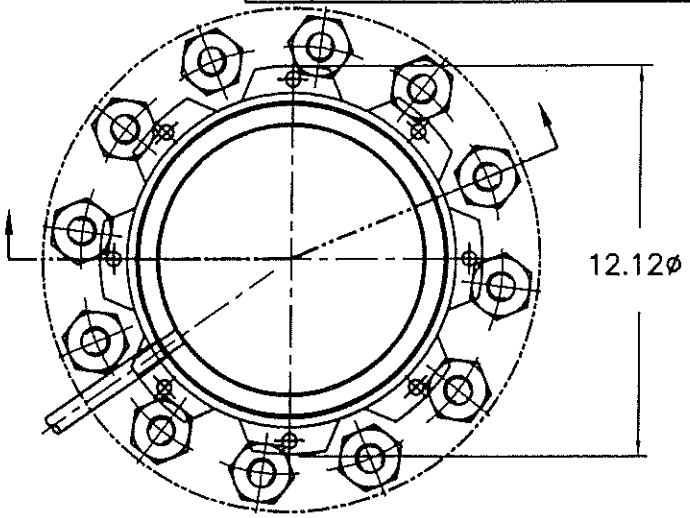

VIEW-'X'

BURST TOLERANCE: ±5%

ALL DIMENSIONS IN INCHES.

REV.	DETAILS	BY	CHKD.	DATE
1	SV00200477	TS	SS	2.6.14

CLIENT: URANIUM CORPORATION

PO No.

USER:

ACCESSORIES: -

SAFETY HEAD SL.NO.:

EQUIPMENT TAG NO.	REFERENCE DWG.NO.	RUPTURE DISK TYPE	RUPTURE DISK SIZE	RUPTURE DISK MATL.	RUPTURE DISK RATING BURST PR.	RUPTURE DISK RATING TEMP.	VAC. SUPPORT TYPE	VAC. SUPPORT MATL.	SAFETY HEAD TYPE	SAFETY HEAD SIZE	SAFETY HEAD MATL.	SAFETY HEAD RATING
*	–	RLS	8"	SS316L	13.0 BAR(G) MFG.RANGE ZERO	150°C	–	–	SRB-7RS (DOUBLE DISK)	8"	SS316L SS316L SS316L	ANSI 300 # RF. SERRATED

TITLE: SAFETY HEAD ASSY.'SRB-7RS' (DOUBLE DISK)

SAFETY SYSTEMS (INDIA) LTD. CHENNAI

ORDER PARTS BY LOT NO:

F.O.NO.:

SCALE: N.T.S.

DATE: 18-3-14

DWG.NO: 1B-30503R1

DWN.: TSP CHKD.: SS

APPD.: SS